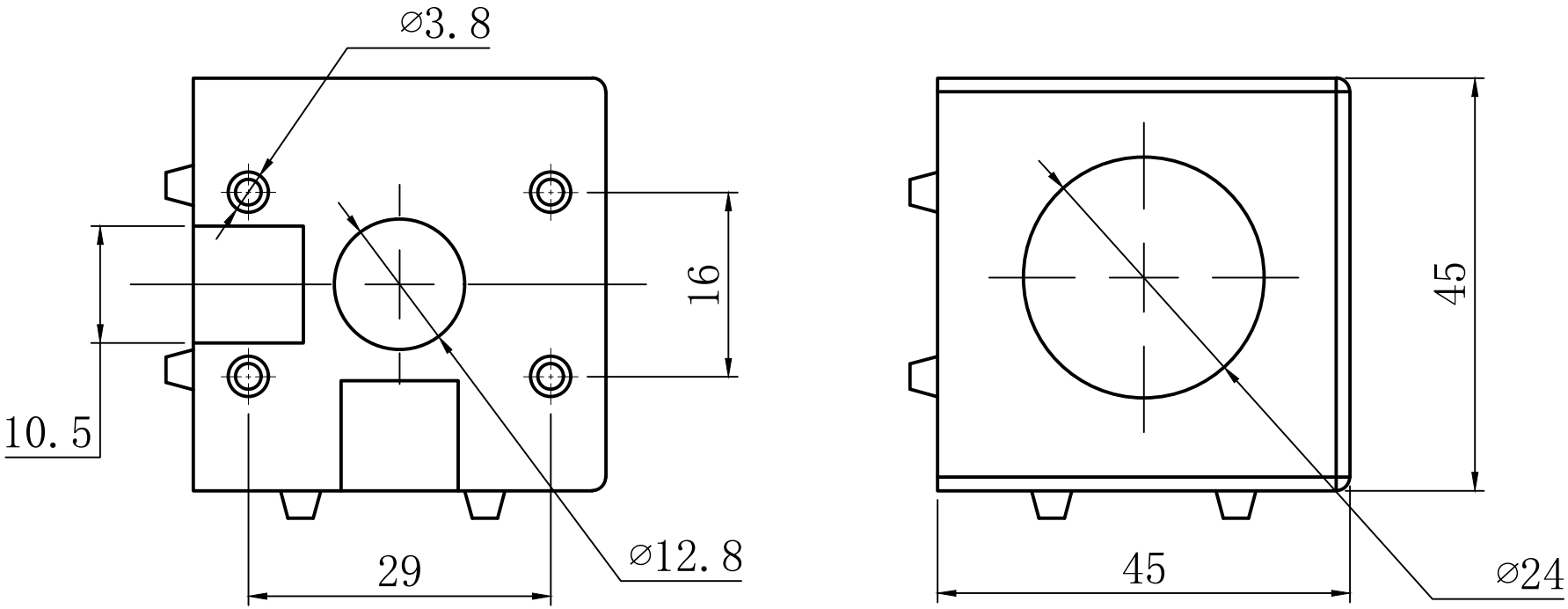
⌀3. 8
16
10. 5
29
⌀12. 8
45
45
⌀24